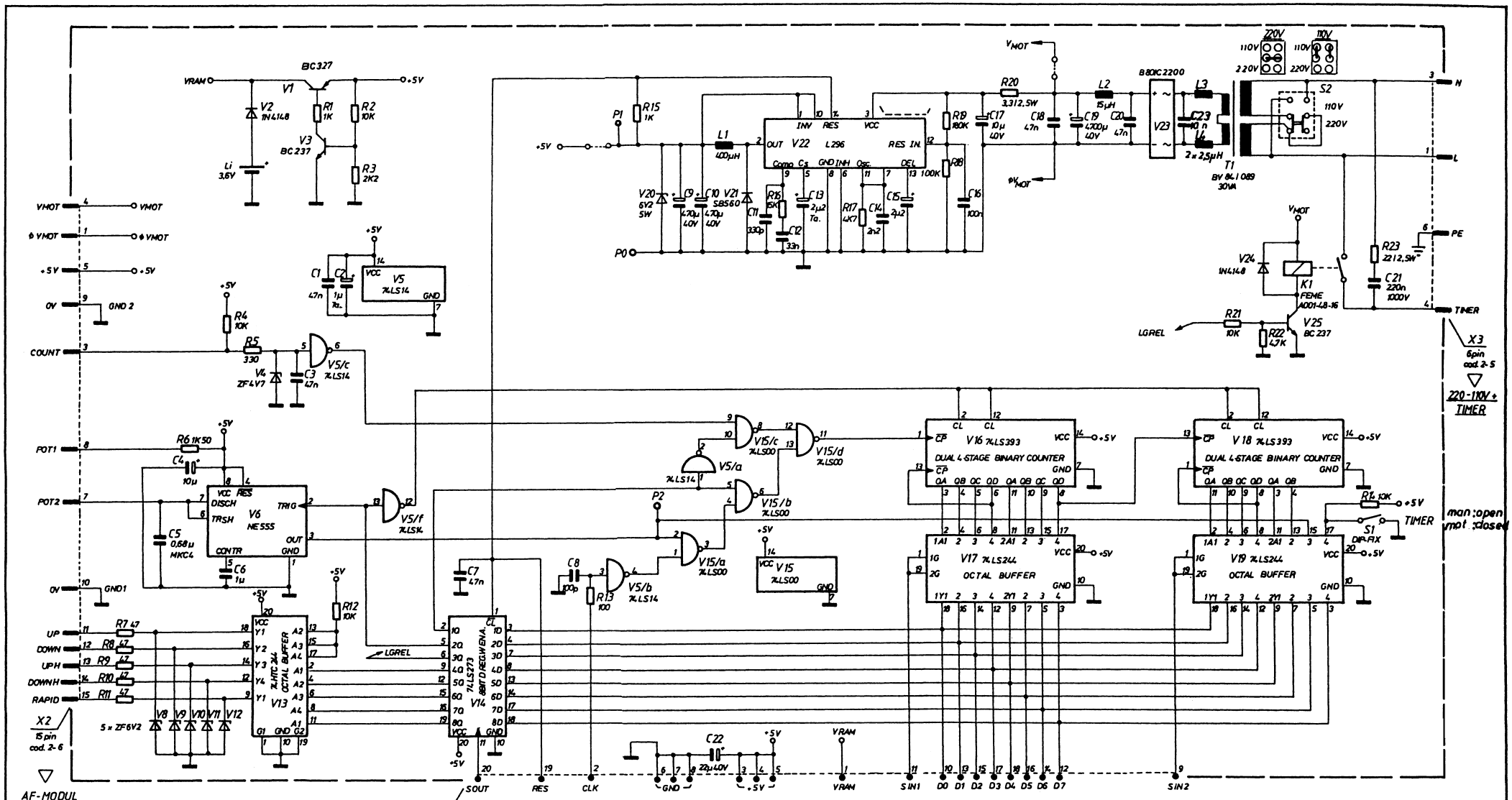

The property of Durst Phototechnik AG. Copying of this document and giving it to others and the use or communication of the contents thereof, are forbidden without express authority. Offenders are liable to the payment of damages. All rights are reserved in the event of the grant of a patent or the registration of a utility model or design.

Ausgabe	Änderung	Tag	Name
1	S2-Orahl br.	26.02.95	S.M.

Freimaßtol.

	Tag	Name
Bearb.	17.6.87	S.M.
Gepr.		
Norm.		

Durst A.G.
Bolzano – Bozen

circuit diagram
POWER CONTROL INTERFACE PCB

MA 60.201.1E

Maßstab: —

ELITE 2000 tim-man-mot